Autonics

ROTARY ACTUATOR TYPE 5 PHASE STEPPING MOTOR

M A N U A L

CE

Thank you very much for selecting Autonics products.
For your safety, please read the following before using.

■ Caution for your safety

※Please keep these instructions and review them before using this unit.

※Please observe the cautions that follow;
⚠ **Warning** Serious injury may result if instructions are not followed.
⚠ **Caution** Product may be damaged, or injury may result if instructions are not followed.

※The following is an explanation of the symbols used in the operation manual.
⚠ Caution: Injury or danger may occur under special conditions.

⚠Warning

1. **In case of using this unit with machinery(nuclear power control, medical equipment, vehicle, train, airplane, combution apparatus, entertainment or safty device, etc.), it is required to install fail-safe device, or contact us for information required.**
   It may cause a fire, human injury or property loss.
2. **Do not use this unit where flammable or explosive gas, corrosion and water exist.**
   It may cause a fire or burn.
3. **Installation, connection, operation, control, maintenan.**
   It may cause a fire or human injury, give electronic shock.
4. **Please install it in power off.**
   It may give electronic shock.
5. **Please earth or install it with housing so that protecting a touch of human body.**
   It may give electronic shock or human injury.
6. **Do not disassemble or modify this unit.**
   It may cause damage to this product or quality down.

⚠Caution

1. **Please keep the specification of this unit.**
   It may cause damage to this product.
2. **Do not put obstacle object for well ventilation around this unit.**
   It may cause a damage to this product or malfunction of peripheral equipment by motor heating.
3. **Please fix this unit on a metal plate tightly.**
   It may cause human injury or damage of this product and peripheral device.
4. **Please stop this unit when mechanical trouble occurred.**
   It may cause a fire or human injury.
5. **Do not inordinate impact or continuous vibration to this unit.**
   It may cause malfunction of this product.
6. **The surface temperature of the motor is possible to over 70℃ in normal operating state. Please put a caution mark on outstanding place when somebody may approach to the operating motor.**
   It may cause a burn.
7. **Do not carry the cable or rotating part of this unit.**
   It may cause damage to this product or human injury.
8. **Please put a cover on the rotating part of this unit.**
   It may cause human injury.
9. **Please separate as industrial scrapped material when disuse this unit.**

※The above specifications are subject to change without notice.

■ Ordering information

A 35K - M 5 6 6 W - R B 5

Moderating ratio	**5**	1:5
	7.2	1:7.2
	10	1:10
Additional spec.	**No mark**	Standard type
	B	Brake built-in type
Motor type	**R**	Rotary Actuator type
Shaft type	**No mark**	Single shaft
	W	Dual shaft
Motor length	**6**	59.5mm
Motor frame size(width×length)	**6**	□60(60mm×60mm)
Motor phase	**5**	5 phase
Rated current	**M**	1.4 A/Phase
Max. allowable torque	**35K**	35kgf·cm
	40K	40kgf·cm
	50K	50kgf·cm
	Autonics motor	

■ Specifications

AK-M566(W)-R□ / AK-M566-RB□				
Model		**A35K-M566(W)-R5**	**A40K-M566(W)-R7.2**	**A50K-M566(W)-R10**
		A35K-M566-RB5	**A40K-M566-RB7.2**	**A50K-M566-RB10**
Max. allowable torque(※1)		35 kgf·cm (3.5 N·m)	40 kgf·cm (4.0 N·m)	50 kgf·cm (5.0 N·m)
Rotor moment of inertia(※2)		280 g·cm² (280x10⁻⁷ kg·m²)		
Rated current		1.4 A/Phase		
Basic step angle		0.144°/0.072° (Full/Half)	0.1°/0.05° (Full/Half)	0.072°/0.036° (Full/Half)
Gear ratio		1:5	1:7.2	1:10
Allowable speed range		0 to 360 rpm	0 to 250 rpm	0 to 180 rpm
Backlash		±20'(0.33°)		
Electro-Magnetic Brake	Rated excitation voltage	24VDC(non- polarity)		
	Rated excitation current	0.33A		
	Static friction torque	4kgf·cm		
	Rotation part Inertia	2.5×10^{-6} kg·m²		
	Insulation class	CLASS E type(120℃)		
	B type Brake	For power on, brake is off, and a motor starts operating		
	Operating time	Max. 22ms		
	Releasing time	Max. 37ms		
Absolute position error		±20'(0.33°)		
Lost motion		±20'(0.33°)		
Unit weight		Approx. 1.5kg(Brake built-in type: Approx. 1.8kg)		

Common specification		
Insulation class		CLASS B type(130℃)
Insulation resistance		Min. 100MΩ(at 500VDC megger) between Motor coil-case
Dielectric strength		1 minute at 1 kVAC 50/60Hz between Motor coil-case
Environment	Ambient temperature	-10 to 50℃, Storage: -25 to 85℃
	Ambient humidity	35 to 85%RH, Storage: 35 to 85%RH
Protection		IP30(IEC34-5 standards)

※ **1**: Max. allowable torque is standable torque when supply the rated current and stop the motor.
※ **2**: Moment of rotor inertia indicates a part, except Gear-Head part.
※ Environment resistance is rated at no freezing or condensation.

■ Connection diagram

Our 5 phase stepping motor is internally wired in a pentagon connection.
Therefore, it is a proper product for the driver working as a bipolar pentagon driving method of 5 phase stepping motor drivers.
The figure shows the relationship of inside each phase and wire color of stepping motor.

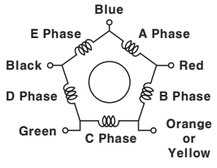

■ Dimensions

◎**AK-M566(W)-R□** (Unit: mm)

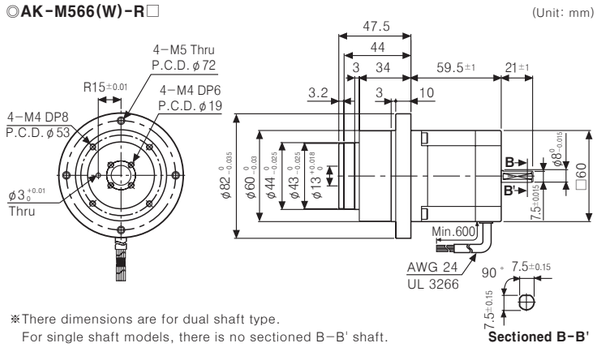

※There dimensions are for dual shaft type.
For single shaft models, there is no sectioned B-B' shaft.

◎**AK-M566-RB□**

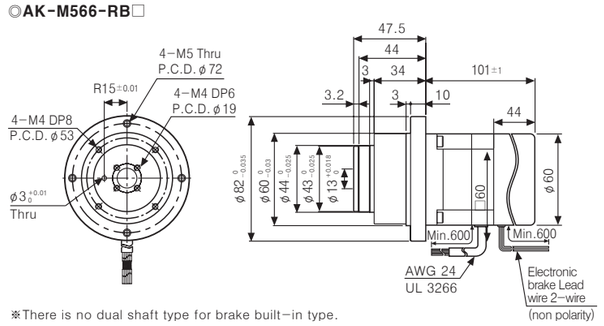

※There is no dual shaft type for brake built-in type.

■ Installation

1. Installation of the motor

· With considering heat radiation and vibration isolation, make sure the motor's inrow to be kept as close as possible against a metal panel having high thermal conductivity such as iron or aluminum. Make sure to use mounting plates with thickness more than 8mm.
· As shown in the figure below, total 4 mounting Tap Holes on F1 and F2 are used to fix rotary actuator. In case of using M4, screw connecting torque is 2[N.m] and 4.4[N.m] when using M5.

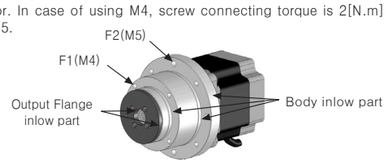

· Do not apply excessive force on motor cable when installing rotary actuators. Do not forcibly pull or insert the cable. It may cause poor connection or disconnection of the cable. In case of frequent cable movement required application, proper safety countermeasures must be ensured.

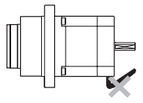

2. Installation condition

Install the motor in a place that meets certain conditions specified below. It may cause product damage if instructions are not following.
① It shall be used indoors.
(This product is designed / manufactured to be installed on machinery as a part.)
② Within -10℃ to 50℃ (at non-freezing status) of ambient temperature
③ Within 85%RH (at non-dew status) of ambient humidity
④ The place without explosive, flammable and corrosive gas
⑤ The place without direct ray of light
⑥ The place without dust, dregs, etc.
⑦ The place without water, oil, etc.
⑧ The place where easy heat dissipation could be made
⑨ The place where no continuous vibration or severe shock
⑩ The place with less salt content
⑪ The place with less electronic noise occurred by welding machine, motor, etc.
⑫ The place where no radioactive substances and magnetic fields exist. It shall be no vacuum status as well.

3. Installation of accessories(Table, Arm, etc.)

· Mount the accessory(table, arm, etc.) on output axis flange using M4 screw. Note that ϕ13 inlow part is processed with c0.3. It is necessary to process the accessory under c0.2 to mount. Place a positioning pin on flange's positioning hole and push it in. Make sure not to place the pin on output flange.
· Do not use a hammer to mount the accessory(table, arm, etc.). It may cause product damage. Please cautiously mount the accessory with hands in a gentle manner.
· Make sure that accessory(table, arm, etc.) mounted on output axis to be tightly fixed. It may cause an accident, if it is detached from the actuator during operation.

4. Proper operation

· Observe the rated product specification
· Do not apply rotational load to the motor when it stops.
· Do not apply the excessive load to the motor during operation. It may cause step out of the motor.
· Use a sensor to detect a completed division or the starting point.

5. Application

● Index Table

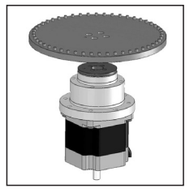

● Moving Arm

6. Sensor attachment

● Index Table

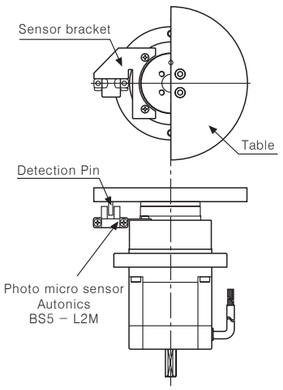

● Moving Arm

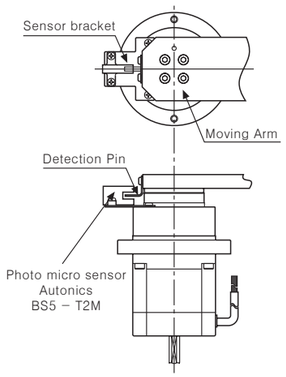

■ Caution for using

1. Use the motor within the allowable torque range.
   The allowable torque range indicates the maximum value of mechanical strength of gear part and the total of ac/deceleration torque of start/stop and friction torque shall not be exceed the allowable torque range, or it may cause the breakdown of gear.
2. Use the motor within the allowable speed range.
   The allowable speed range includes the revolution number of gear and pulse speed of motor. Use the motor within the allowable speed range, or it may shorten the life cycle of gear part. (Backlash is increased.)
3. Be careful of backlash when positioning the motors in both CW/CCW directions.
   Backlash refers to the displacement occurred on motor's output shaft while gear's input axis is fixed. Geared type stepping motors are to realize high accuracy and low backlash. When positioning the motors in both CW/CCW directions, however, backlash may possibly occur. Therefore, make sure that motor positioning will be made in one single direction in case of geared type motors.
4. Temperature rise
   The surface temperature of motor shall be under 100℃ and it can be significantly increased in case of running motor by constant current drive. In this case, use the fan to lower the temperature forcedly.
5. Using at low temperature
   Using motors at low temperature may cause reducing maximum starting / driving characteristics of the motor as ball bearing's grease consistency decreases due to low temperature.(Note that the lower the bearing's grease consistency, the higher the bearing's friction torques.) Start the motor in a steady manner since motor's torque is not to be influenced.
6. Clack sound when using electromagnetic brake
   In case of brake built-in type motors, there occurs certain sound while turning on/off the power to the motor. This is not a product failure symptom. Do not strike or disassemble the product for this.

※It may cause malfunction if above instructions are not followed.

■ Major products

■ Proximity sensors
■ Counters
■ Timers
■ Display units
■ Panel meters
■ Pressure sensors
■ Area sensors
■ Photoelectric sensors
■ Fiber optic sensors
■ Door/Door side sensors
■ Rotary encoders
■ Graphic/Logic panels
■ Power controllers
■ Sensor controllers
■ Temperature controllers
■ Tachometer/Pulse(Rate) meters
■ Temperature/Humidity transducers
■ Switching power supplies
■ Stepping motors/drivers/motion controllers
■ Field network devices
■ Laser marking system(CO_2, Nd:YAG)
■ Laser welding/soldering system

Autonics Corporation
http://www.autonics.com
Satisfiable Partner For Factory Automation
■**HEAD QUARTERS :**
41-5. Yongdang-dong, Yangsan-si, Gyeongnam, 626-847, Korea
■**OVERSEAS SALES :**
Bldg. 402 3rd FL., Bucheon Techno Park, 193, Yakdae-dong, Wonmi-gu, Bucheon-si, Gyeonggi-do, 420-734, Korea
TEL : 82-32-610-2730 / FAX : 82-32-329-0728
■**E-mail :** sales@autonics.com
The proposal of a product improvement and development :product@autonics.com

EP-KE-10-0006C